REV.	ECN.NO.	MODIFY.CONTENT	DATE
A	---	初版发行	07/10' 20

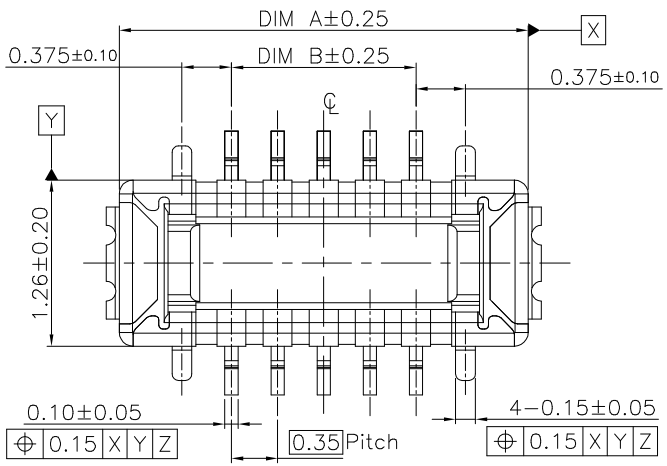

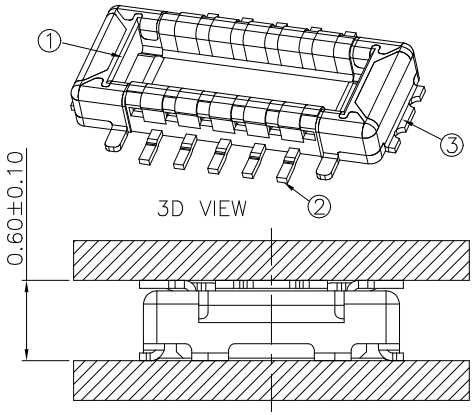

Note:
1. Material:
   1.1 Housing: thermoplastic high temp.UL94V-0; Color: natural.
   1.2 Terminal: copper alloy.
   1.3 Power Terminal: copper alloy.
2. Finsh:
   2.1 Terminal:gold plating over nickel 50u''Min overall.
   2.2 Fitting Nail:gold plating over nickel 50u''Min overall.
3. Part No. 1B3502P * ** D13-HF
   - HF=Halogen Free
   - Plating: F=Gold FLASH
   - PIN NO.

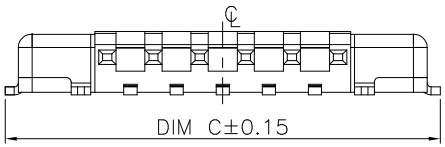

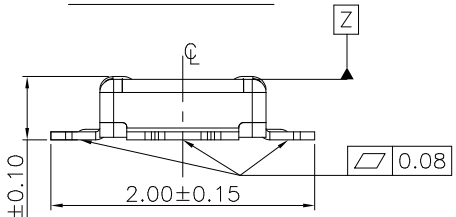

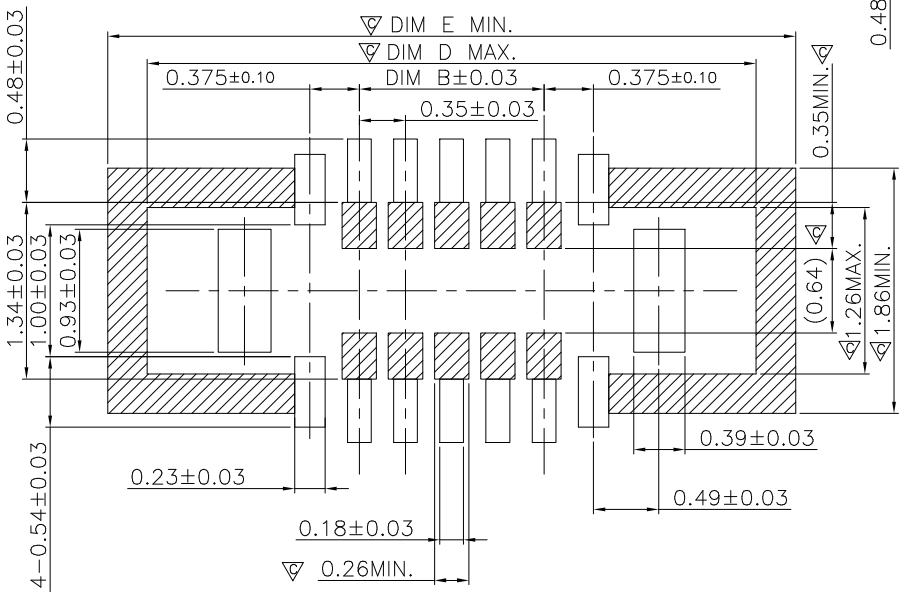

RECOMMENDED P.C.B PATTERN LAYOUT

PROHIBITED AREA OF PATTERN WIRING AND SOLDER
(FOR EACH AREA,THE WIRING THAT TOUCHES ON THE SOLDER CAN BE ATTACHED,THEN COVERED WITH A FILM TO KEEP SOLDER OUT)

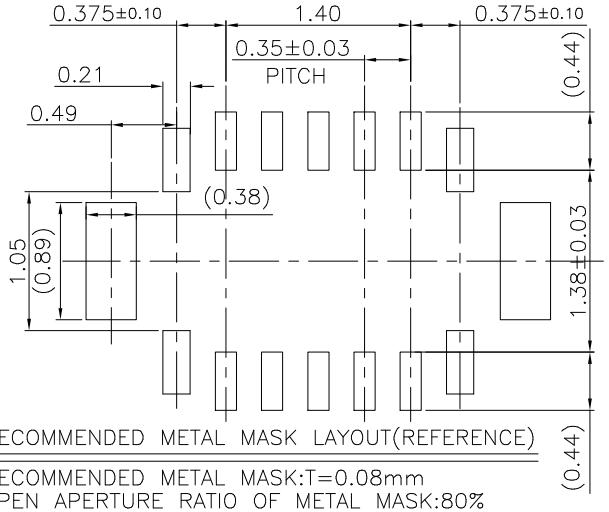

RECOMMENDED METAL MASK LAYOUT(REFERENCE)

RECOMMENDED METAL MASK:T=0.08mm
OPEN APERTURE RATIO OF METAL MASK:80%

CTKS	DIM A	DIM B	DIM C	DIM D	DIM E
6	2.40	0.70	2.60	3.92	4.52
8	2.75	1.05	2.95	4.27	4.87
10	3.10	1.40	3.30	4.62	5.22
12	3.45	1.75	3.65	4.97	5.57
14	3.80	2.10	4.00	5.32	5.92
16	4.15	2.45	4.35	5.67	6.27
18	4.50	2.80	4.70	6.02	6.62
20	4.85	3.15	5.05	6.37	6.97
22	5.20	3.50	5.40	6.72	7.32
24	5.55	3.85	5.75	7.07	7.67
26	5.90	4.20	6.10	7.42	8.02
28	6.25	4.55	6.45	7.77	8.37
30	6.60	4.90	6.80	8.12	8.72
32	6.95	5.25	7.15	8.47	9.07
34	7.30	5.60	7.50	8.82	9.42
36	7.65	5.95	7.85	9.17	9.77
38	8.00	6.30	8.20	9.52	10.12
40	8.35	6.65	8.55	9.87	10.47
42	8.70	7.00	8.90	10.22	10.82
44	9.05	7.35	9.25	10.57	11.17
46	9.40	7.70	9.60	10.92	11.52
48	9.75	8.05	9.95	11.27	11.87
50	10.10	8.40	10.30	11.62	12.22
52	10.45	8.75	10.65	11.97	12.57
54	10.80	9.10	11.00	12.32	12.92
56	11.15	9.45	11.35	12.67	13.27
58	11.50	9.80	11.70	13.02	13.62
60	11.85	10.15	12.05	13.37	13.97
62	12.20	10.50	12.40	13.72	14.32
64	12.55	10.85	12.75	14.07	14.67
66	12.90	11.20	13.10	14.42	15.02
68	13.25	11.55	13.45	14.77	15.37
70	13.60	11.90	13.80	15.12	15.72

GENERAL TOLERANCE			DRAWN			SCALE	PART NO.	1B3502P***D13-HF
X.±0.30		x.°±3.0°	CHECKED			1/1	TITLE	0.35Pitch MH=0.60mm BTB PLUG SMT TYPE
.X±0.20		.x°±2.0°	APPROVED			UNITS	mm	CUSTOMER DRAWING
.XX±0.10			File NO.	B3502P01S				
.XXX±0.05			REV.	蘇州祥龍嘉業電子科技股份有限公司 Goldenconn Electronic Technology Co.,LTD				
SHEET	1/1	Q'TY 1	A					